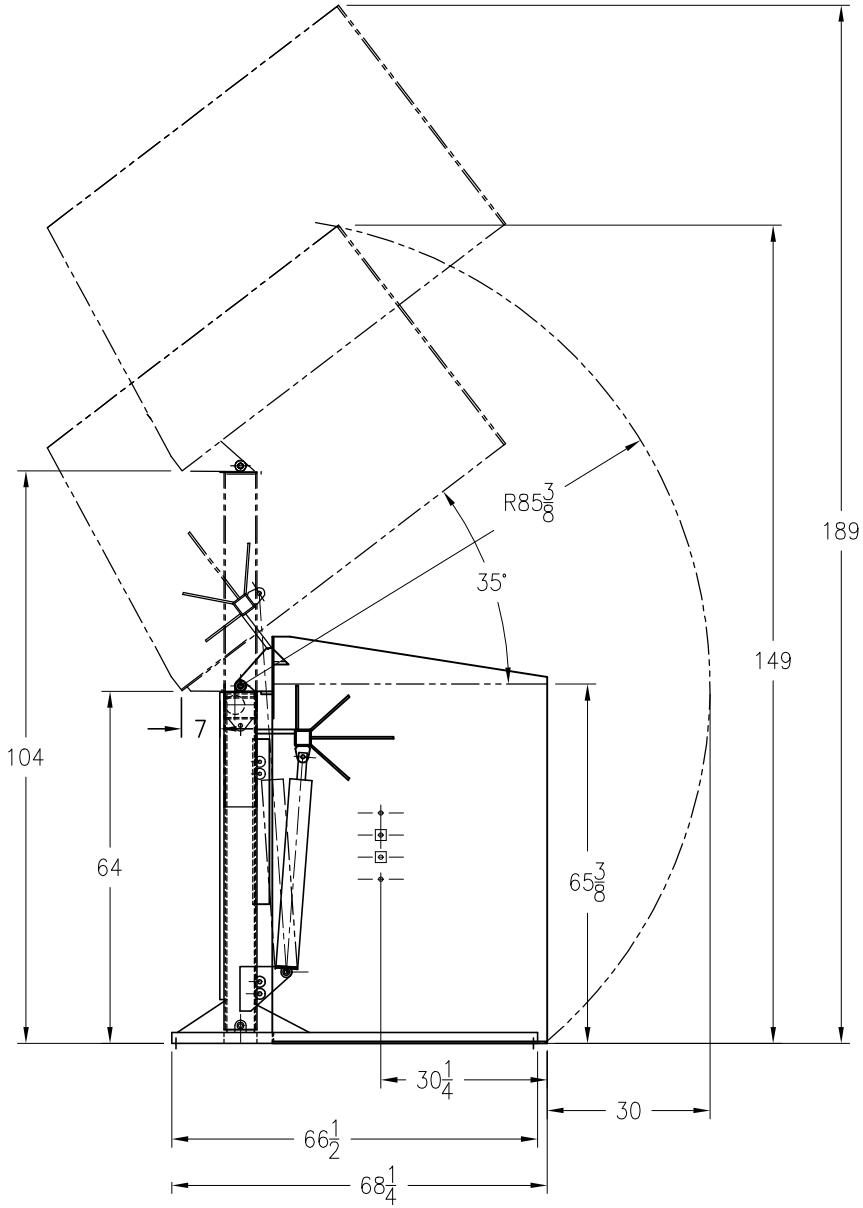

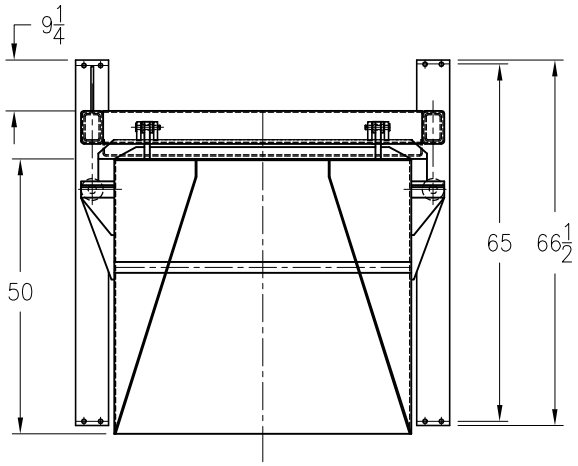

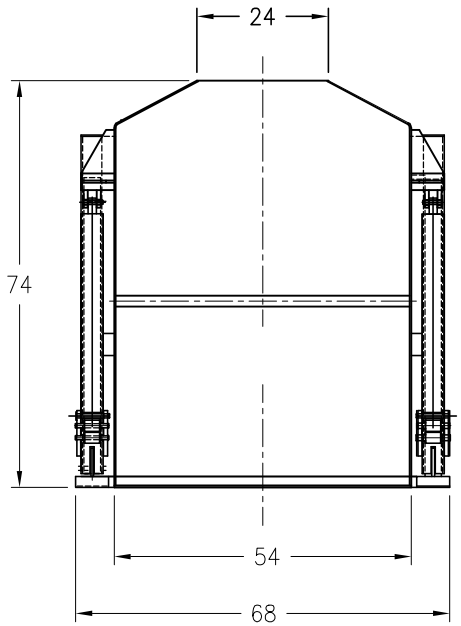

Air Technical Industries
7501 CLOVER AVE. – MENTOR,OHIO

TITLE LAYOUT			
TELESCOPIC CONTAINER DUMPER			
PART No. CDT–25450		MATERIAL	
DRAWN VN	DATE 9/14/2010	SCALE N.T.S.	
APPROVED			