REV	DATE	ENG	DESCRIPTION

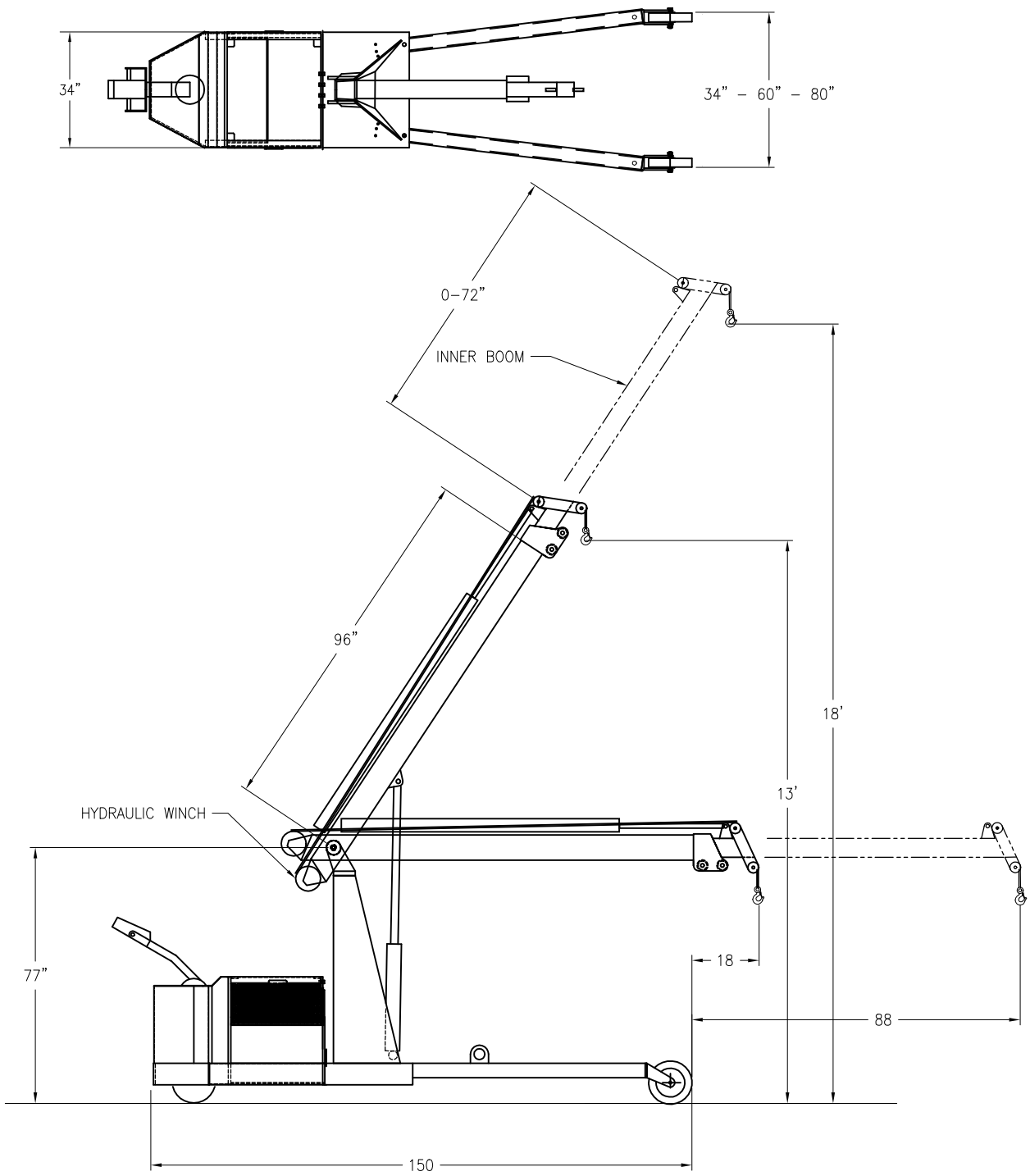

Air Technical Industries

7501 CLOVER AVE. – MENTOR,OHIO

TITLE			
PG–6000–SPBW			
DWG. Type LAYOUT	MATERIAL		
DRAWN VN	DATE 4/13/2004	SCALE N.T.S.	REVISION –